ILLUMINATOR DATA

LTZPFL160-00-1-UV365-24V

Lighting Dimension

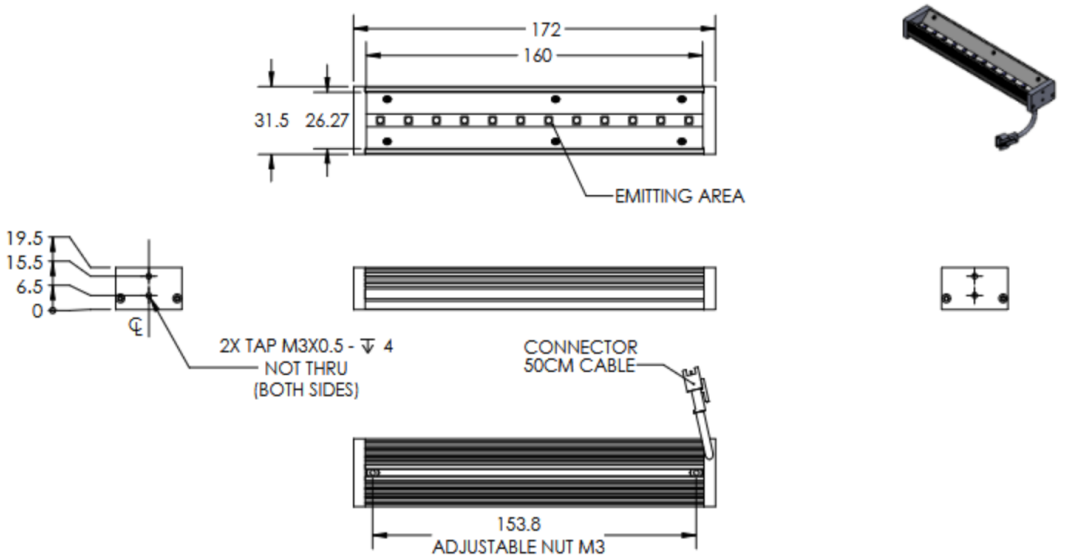

Mechanical Information

Casing Material	Extrusion, Standard Steel
Storage Temperature Range	0 - 45°C
Storage Humidity Range	20 - 85%
Weight	0g
Width / Inner Diameter	31.5mm
Length / Outer Diameter	172mm
Height / Thickness	19.5mm

ILLUMINATOR DATA

LTZPFL160-00-1-UV365-24V

Lighting Information			
LED Color	UV 395		
Wavelength	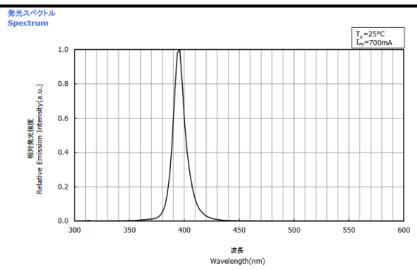 390 nm - 400 nm		
Working Distance	100mm	130mm	150mm
Intensity (±15%)	0lx	0lx	0lx
Illumination (Number of Row)	1		
Illumination Active Area	Active Outer Diameter	160	
	Active Inner Diameter	26.27	
Emission Angle	0°		
Eye Safety Class (IEC62471)	Moderate-Risk (Class 2) Products with sources, which pose a potential photobiological hazard even if a human does not feel any visual or thermal discomfort which is caused btthe high intensity light. Example: This hazard level exceeds the criterion for Risk Group 1. 1,000 seconds of exposure, however, poses no acute hazard to either eye or skin, and 0.25 seconds of the intent starting causes no blue light retinal hazard.		
Chromaticity Table For White Colour Only			

Electrical Information	
Rated Voltage	24V
Rated Current	200mA
Power Consumption	4.800W
Casing Temperature, After 60 minutes operation	60°C

Strobe Mode Specification		
*Normal Strobe Voltage	24V	
*Normal Strobe Current	200mA	
Overdrive Voltage Range	Min: 36V	Max: 48V
Overdrive Current Range	Min: 2200mA	Max: 4000mA
Recommended Overdrive Voltage	36V	
**Max. Trigger Pulse Duration	10%	
**Max. Duty Cycle	10msec	

*Normal strobe means the lighting is operated using the rated power. Overdrive means the power supplied to the lighting exceeded the rated power.

**Overdrive condition must not exceed the max. trigger pulse duration and max. duty cycle.

ILLUMINATOR DATA

LTZPFL160-00-1-UV365-24V

Connection Information			
Connector Type	JST SMR-03V-B		
Cable Length	500mm		
Pin Configuration	**Pin**	**Signal**	**Cable Color**
	1	24V	RED
	2	-	-
	3	GND	WHITE / BLACK
	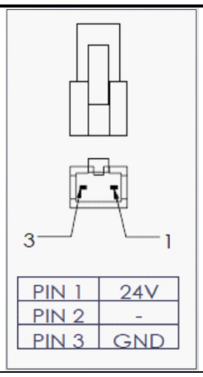		

Additional Information	
Additional Cooling Method	Attached to machine part for better heat dissipation
Intensity Controller Selection	LTIC series
CE Conformity	YES
RoHS Compliance	YES

Application	
Illumination Type	UV Illumination
Application Use	• Allow Chemicals That Has UV Lighting Interaction to be VisibleUnder The Blue Ligt 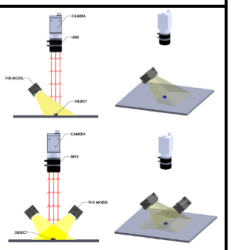

ILLUMINATOR DATA

LTZPFL160-00-1-UV365-24V

Lighting Pattern				
Working Distance	For further details, please contact us			
Display and Image	For further details, please contact us			
Data Results	Horizontal	Meas. (mm)	Vertical	Meas. (mm)
	90%	N.A.	90%	N.A.
	90%	N.A.	90%	N.A.
	80%	N.A.	80%	N.A.
	70%	N.A.	70%	N.A.
	60%	N.A.	60%	N.A.
	50%	N.A.	50%	N.A.
	40%	N.A.	40%	N.A.
	30%	N.A.	30%	N.A.
	20%	N.A.	20%	N.A.
	10%	N.A.	10%	N.A.